METHOD FOR DEVELOPING FAN ENERGY USE FOR FIXED AND VARIABLE SPEED NIGHT VENTILATION COOLING SYSTEMS
Revised 9/29/10
Updated 11/20/13

Background

Estimation of fan energy for variable speed furnaces and air handlers is more complicated than simply assigning a fixed watt per cfm value as can be done with some confidence for fixed speed systems. Variable speed ventilation cooling has been shown to produce greater energy savings than similar systems using constant speed fans[1]. Variable speed ECM driven fans have two characteristics that distinguish them from permanent split capacitor (PSC) fans: (1) They have a higher efficacy (lower Watts/CFM) than constant speed PSC powered fans when operated under identical conditions; (2) Unlike PSC fans, they deliver a relatively constant airflow over a wide range of external static pressures and respond to increasing static pressure by ramping up torque and RPM, and therefore can use more power. Therefore, proper distribution system design is needed to ensure the higher efficacy of variable speed fan motors is realized.

NightBreeze, the first commercially available variable speed ventilation cooling system, uses a complex algorithm to predict the next day's cooling demand based on forecasted temperatures, and adjusts the fan speed so it is varies with cooling demand. NightBreeze also adjusts the low limit temperature on a daily basis to prevent over-cooling, but for simplicity it is proposed that a fixed 68°F low limit temperature be used for all ventilation cooling systems[2] with the upcoming 2013 ACM modeling assumptions.

Changes Since the Previous Variable Speed Method Was Proposed

The method for variable speed central fan systems submitted in 2010 was based on test data obtained using a NightBreeze variable speed hydronic air handler with a GE ECM 2.3 motor and a hot water coil. Changes that have occurred since the 2010 tests were completed include the following:

- The GE ECM 2.3 motor that was controlled by a PWM signal is no longer produced and has been replaced by motors (by Regal Beloit and Emerson) that are controlled using serial communications. All HVAC manufacturers except Goodman and Rheem, who have adopted open protocol ClimateTalk serial communications, use proprietary communications, limiting NightBreeze applications to those brands for the time being.
- A new NightBreeze control with ClimateTalk capability was developed. Control algorithms were modified to better optimize vent cooling-air conditioning tradeoffs and to reduce the amount of ventilation cooling delivered during conditions of low cooling load.

---

1 Demonstrated through modeling and third party field tests commissioned by PG&E. The report can be found at: http://www.etcc-ca.com/reports/residential-night-ventilation-cooling-field-monitoring-project

2 This includes whole house fans, fixed speed systems (SmartVent), as well as variable speed systems.

- The NightBreeze hydronic air handler, which was used to develop prior equations for compliance, is no longer being produced.
- A new, low leakage, low pressure drop damper[3] developed with CEC EISG funding is replacing the SmartVent damper previously used.
- New 2013 requirements for duct sizing and improved practices will result in lower fan pressures and higher fan efficacy.

Method of Test for Variable Speed System

Testing was completed using a Goodman GMVC80604B variable speed furnace connected to the new NightBreeze damper and control. The equipment was configured as shown in the attached test plan. Testing assumed the following conditions would be representative of most installations:

	Inches w.c.	Pascals
Return duct & grille	0.14”	35 Pa
Filter	0.20”	50 Pa
Supply duct & grilles	0.14”	35 Pa
Cooling coil	0.24”	60 Pa
Total fan pressure	0.72”	180 Pa

The maximum rated pressure for the furnace that was tested is 0.80” ESP. “Maximum” airflows were set to approximately 600, 800, 1000, 1200, and 1600 cfm to represent 1½, 2, 2½, 3, and 4 ton systems[4] operating at 400 cfm/ton. At each “maximum” airflow setting the supply plenum pressure was adjusted to 95 Pa to represent the combined pressure drop of the supply ducting, grilles, and cooling coil. The return plenum pressure was adjusted to -35 Pa to represent outside air duct and louver pressure drop.

With the fan controls set to deliver the “maximum” system airflows listed above (600 to 1600 cfm), restrictions in the furnace plenum discharge and the outside air intake to the NightBreeze damper were adjusted to obtain the specified 95 and -35 Pa supply/return plenum pressures respectively. Also, for each maximum airflow and corresponding restriction settings the fan speed was reduced using the NightBreeze control to simulate the lower airflows the system would operate at under milder outdoor conditions. Airflow, supply and return pressures, and fan watts were recorded at each of these settings.

This test approach recognizes that the pressure drop characteristics (versus flow) through the outside air damper and filter is fixed regardless of system size, but the size of ducts and grilles will be selected based on the size of the air conditioning system. The goal of this testing was to develop curve fit equations to estimate fan watts at maximum system airflows, and to develop an equation that can be used to modify fan watts as airflow is adjusted on a daily basis in response to predicted ventilation cooling demand.

---

[3] The damper allows the system to switch between standard HVAC operating modes (return air directed to the furnace or air handler) and ventilation operation (outdoor air delivered to furnace).

[4] Houses requiring 5-ton cooling systems would need to install two systems. The largest filter NightBreeze can accommodate is 20x30x4. Filter pressure drop at 2000 cfm would result in a fan efficacy of more than 0.58 W/cfm.

Test Results

Results of the tests described above are listed in Table 1. "Fan %" is the signal sent to the motor to achieve the desired airflow rate, and is based on a maximum rated airflow of 1540 cfm (from manufacturer's literature).

Table 1: Results of Airflow and Watt Draw Tests with Simulated Distribution System

Unit	Manual Fan	Fan	Measured	Set Static Pres.	Meas. Static Pressure			Watts per
Tons	CFM Setting	%	CFM	Pres. (Pa)	Supply	Return	Watts	CFM
4	1600	1.00	1575	95	111.4	87.7	737	0.468
	1200	0.78	1196		68.9	52.5	321	0.268
	800	0.52	798		33.1	26.5	106	0.133
	400	0.26	399		9	9.1	23.7	0.059
	240	0.16	274		4.2	5.4	14.4	0.053
3	1200	0.78	1200	95	95.2	66.1	376	0.313
	900	0.58	899		54.9	38.9	165	0.184
	600	0.39	595		24.7	19.5	57.2	0.096
	300	0.19	297		6.3	6.8	16.7	0.056
2.5	1000	0.65	1005	95	95.3	59.2	261	0.260
	750	0.49	745		53.3	34.2	114	0.153
	500	0.32	497		23.9	17.1	43.3	0.087
	250	0.16	258		6.6	6.2	14.9	0.058
2	800	0.52	808	95	95.2	52.5	177	0.219
	600	0.39	604		53.3	30.5	81.9	0.136
	400	0.26	410		24.8	15.7	34.4	0.084
	200	0.13	257		9.8	7.3	16.3	0.063
1.5	600	0.39	605	95	95.5	45.4	119	0.197
	450	0.29	444		50.8	25.5	55.6	0.125
	300	0.19	272		19.1	10.7	21.8	0.080

A fit of the "maximum" CFM values vs. fan power was obtained using the following power equation:

$$\text{MaxCFM Power} = 44.616 \times 1.00175684^{\text{MaxCFM}} \qquad \textbf{Equation 1}$$

Figure 1 plots the measured data from Table 1 as well as the curve fit of the data using Equation 1. The correlation coefficient is 0.99957.

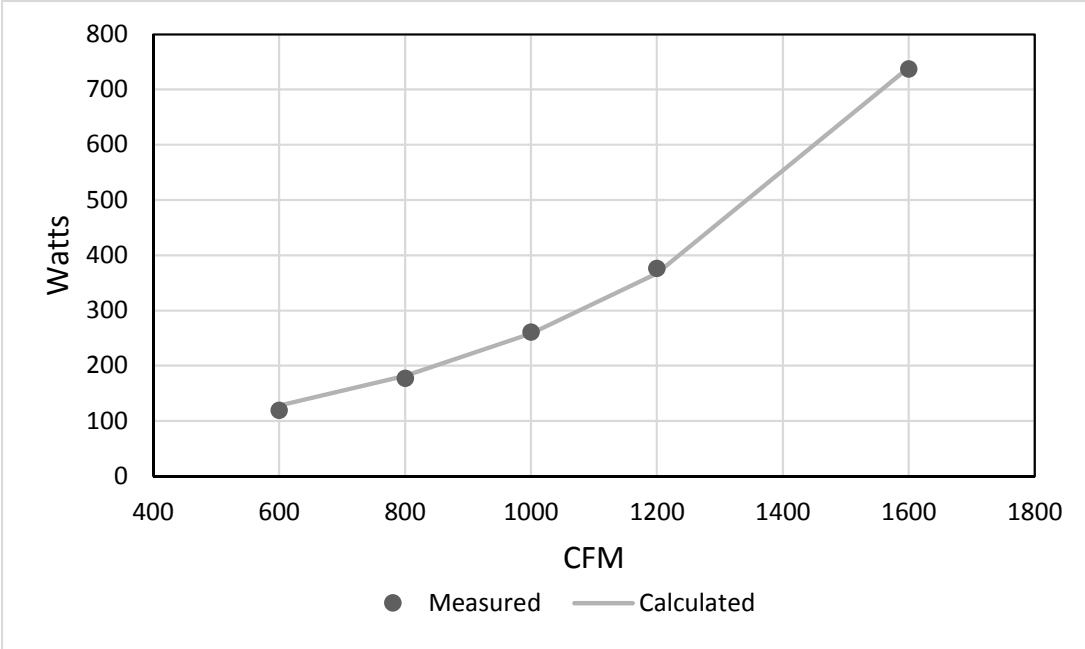

Figure 1: Measured and Calculated Fan Watt Draw at Maximum Airflow Settings

Power at Reduced Airflows

Data from the same series of laboratory tests were used to identify power at reduced airflows for each of the set "maximum" flow rates. These measurements are also provided in Table 1.

To develop a simple means of estimating the power corresponding to reductions in airflow it was assumed that power varies with airflow raised to some power. If fan laws were strictly applied this exponent would equal 3, but since fan efficiency varies with speed it was necessary to identify the actual exponent. The coefficient was found by calculating fan power using the following equation and varying the exponent until the sum of the standard deviations between measured and calculated values was minimized.

$$P_2 = (P_1 \times Q_2^n) / Q_1^n$$ **Equation 2**

Where: P_2 = fan power at reduced airflow (Watts)
P_1 = fan power at maximum airflow (Watts)
Q_1 = maximum airflow (MaxCFM)
Q_2 = airflow at reduced airflow setting for given conditions (VentCFM)
n = exponent

A coefficient (n) of 2.767 yielded the lowest sum of standard deviations. The curve of Equation 2 is plotted with measured values in Figure 2.

$$P_2 = (P_1 \times Q_2^{2.767}) / Q_1^{2.767}$$

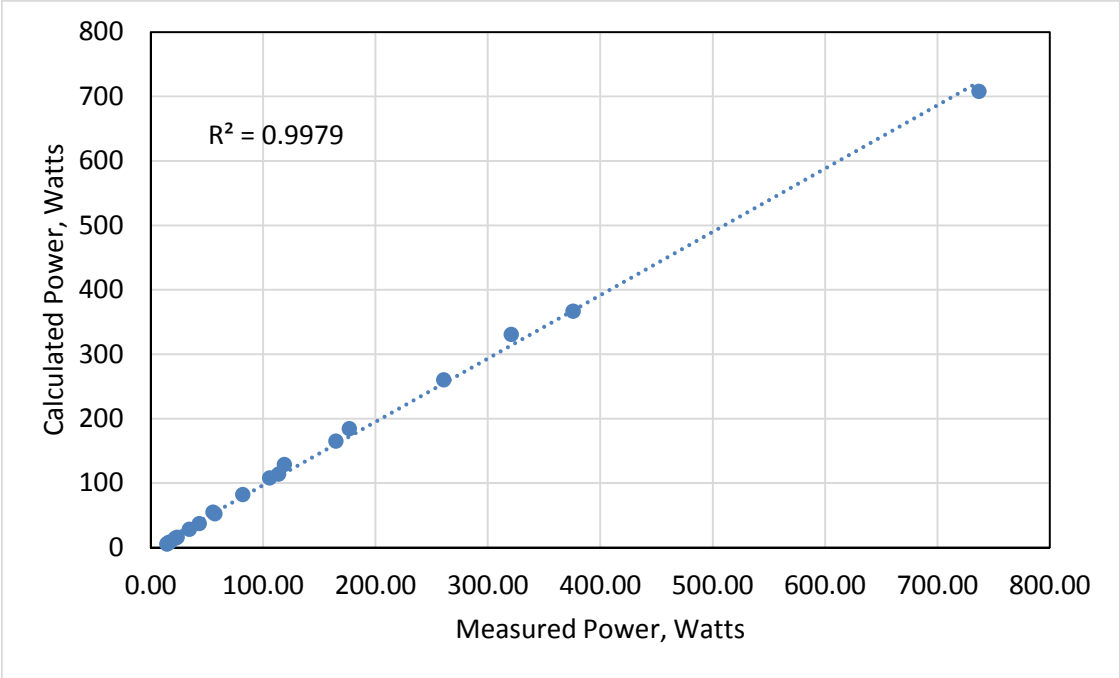

Estimation of Airflow as a Function of Climate Conditions

Each night NightBreeze determines the optimal airflow rate needed to reduce the combined daily energy use of the fan and air conditioning unit. A complex set of equations derived from EnergyPlus simulations is used to determine the optimal airflow rate using weather predictions for the following day[5]. The EnergyPlus runs were completed using the standard 2100 ft^2 house that requires up to 1200 cfm for air conditioning in Climate Zone 12. From these results a relationship between the next day's average temperature and airflow was developed. Thus, under the hottest outdoor temperature conditions, the airflow would be 100% of the maximum.

Rather than employ the proprietary NightBreeze equations for the compliance model, a more generic, simplified method was developed that uses an average of the minimum and maximum outdoor temperatures over the *previous* 24 hours to develop an equation that approximates the optimal airflow rate as a fraction of the maximum rate[6]. Using airflow rate fractions (calculated over maximum) allows the airflow to be scaled to the airflow and cooling load of the particular house[7].

[5] The newly developed NightBreeze control obtains forecast data from local on-line weather sources, whereas the previous version used predictions based on previous day's temperature patterns.
[6] The equation previously submitted used only the previous day's maximum outdoor temperature, but greater accuracy is obtained by using the average of minimum and maximum. Forecasted temperatures could have been used here, but previous day's temperatures were used to keep the control approach more accessible to other system developers.
[7] The previous approach used 0.6 cfm/ft^2 of floor area as the metric instead of design cooling airflow. The design or maximum airflow rate for ventilation cooling can be assumed to be 400 cfm/ton of air conditioning.

NightBreeze algorithms were used to iteratively calculate airflow fractions over a range of outdoor temperatures with the intent of developing a curve fit equation for use in the compliance model. Assumptions used in the NightBreeze model included:

Daily outdoor temperature swing 33°F
Indoor temperature at midnight = 0.2 x Tout_max + 58

where Tout_max = maximum outdoor temperature for last 24 hours

The outdoor temperature swing is an average across several non-coastal climate zones and was obtained from ASHRAE Region X data. Indoor temperature at midnight is a key parameter in determining fan speed and the equation reflects observed indoor-outdoor temperature trends for typical houses.

The NightBreeze algorithm was applied to calculate airflow fractions for a range of average outdoor temperatures. The following equation provided the best fit of the daily maximum outdoor temperature (Tout_avg) to the airflow fraction (AF). This equation does not require bounding to prevent the air flow fraction from exceeding 1 or going below 0.

$$AF = 1/(1+\exp(653-8.152*Tout_avg))^{0.010654}$$ **Equation 3**

The NightBreeze control algorithm also limits NightBreeze operation to prevent operation on days when air conditioning is not required. This limit is a function of the cooling setpoint and was also developed using EnergyPlus simulations. For a setpoint of 77°F the cutoff temperature (average of previous day's outdoor max-min) is 66°F[8].

Proposed Method

Variable Speed Central Fan System Modeling

Current inputs to the CBECC variable speed ventilation cooling model include "Maximum Flow" and "Watts / CFM". The Title 24 analyst will be directed to use the air conditioner sizing to set Maximum Flow (at 400 cfm/ton), and to enter the Watts / CFM from a table of recommended values that will be developed from Table 1 (both are required to be HERS-verified in the field). The ACM method should be as follows:

For each run:

Calculate the MaxCFM Power (P_1) from the entered Maximum Flow using Equation 1:

$$MaxCFM\ Power = 44.616 \times 1.00175684^{MaxCFM}$$

[8] The 66°F setting is proposed, but will need to be verified within the CBECC simulation.

For each day:

Calculate the daily airflow fraction (AF) using Equation 3 and the previous day's average of minimum and maximum temperatures (Tout_avg):

$$AF = 1/(1+\exp(653-8.152*Tout_avg))^{\wedge 0.010654}$$

Calculate the daily airflow using;

$$VentCFM = AF \times MaxCFM$$

Calculate the daily fan power (P_2) using Equation 2, MaxCFM (Q_1), and VentCFM (Q_2):

$$P_2 = (P_1 \times Q_2^{2.767}) / Q_1^{2.767}$$

For each hour:

Enable vent cooling operation under the following conditions:

$Tout_avg \geq 66°F$

$Tin - Tout \geq 5°F$

$Tin \geq 68°F$

Set the ventilation cooling airflow rate to VentCFM (Q_2) and the fan power to P_2 while vent cooling is enabled. Tout_avg is the seven day rolling average outdoor temperature.

CFM Limits: Legal values of Maximum Flow should not exceed 1600 cfm[9]. This will help ensure that the Watts / CFM value will be less than 0.58. If builders require more than 4 tons of cooling capacity they would need to install two or more systems and enter the airflow and Watts / CFM for each system.

Other Functions: NightBreeze operates as an economizer if the outdoor temperature is cooler than indoor (return air) temperature by opening the outside air damper during air conditioner operation. Since this is a rare occurrence given the 78° and higher setpoints applied by the ACM, this function is not anticipated to be needed in the compliance model.

NightBreeze also provides fresh air ventilation in accordance with ASHRAE 62.2 standards, while avoiding ventilation during extreme outdoor temperatures. Fresh air ventilation will be handled by field verification of low speed airflow. A control setting is provided to allow the rater to set both maximum and minimum airflows.

<u>Fixed Speed Central Fan System Modeling</u>

Fixed speed central fan systems are much simpler in their control strategy as they are assumed to operate at a fixed airflow level and fan efficacy every hour the conditions are appropriate (cooling thermostat mode, Tin – Tout ≥ 5°F, and Tin ≥ 68°F. Current CBECC simulations of fixed speed systems suggest results that are not at all consistent with the findings of the 2007 PG&E field monitoring study. The primary difference is

[9] This limit was determined from tests of NightBreeze but may be valid for SmartVent systems also.

excessive fan operation during swing seasons and mild summer periods, when no air conditioner cooling is being predicted by the model. This excessive ventilation occurs because ventilation cooling is activated as soon as the seven day rolling average outdoor temperature exceeds 60°F. To correct this anomaly, we propose that ventilation cooling is not activated until the rolling average temperature exceeds 66°F. A modified version of the CBECC model is needed to verify that the 66°F setting is appropriate.

NIGHTBREEZE TEST PLAN

October 2013

Objective

This testing is designed to update the equations used for Title 24 compliance of variable flow central fan systems using a typical furnace and new NightBreeze damper.

Equipment and Materials

- Completed damper assembly with MERV 6, 4" filter installed, a 20" collar for connection to the furnace, an 18" collar for the outside air source, and a 14" collar for the secondary return
- Round dampers for the 18" outside air source and 14" secondary return
- Short section (1-3') of 20" flex duct
- Goodman furnace (GMVC80604BX) with a return plenum with 20" collar, and supply plenum with TrueFlow installed and opposed blade damper attached to discharge opening
- Control, configured to deliver 100%, 75%, 50%, 25%, and 15% of set airflow. Testing will be completed at the following set CFM's representing systems ranging from 1½ to 4 tons: 600, 800, 1000, 1200, & 1600.
- Manometer with pressure probes
- Power meter for measuring fan watt draw

Watt Draw Tests

Setup

Install the furnace, damper, plenums, ducting, return air grille, and TrueFlow grid as shown in the figure below. Tightly seal the 20" duct connections and damper connections. Close the secondary return air damper (D2). Connect the NightBreeze control to the furnace serial port. Install power monitor, pressure probes, and connect manometers to the probes and TrueFlow. Before beginning tests verify that the highest fractional fan speed (100%) delivers close to the manufacturer's maximum rating of 1540 cfm.

Fan Watt Draw Tests

The system will be tested at five "Max CFM" settings representing system sizes from 1½ to 4 tons, and at reduced airflows from 100% down to about 25% for each max cfm setting. These data will be used to develop updated curves to be incorporated into the CBEC model. Supply and return pressures will be adjusted to simulate attached ducting and grilles.

1. Set the vent damper to outside air position
2. Set the fan fraction to 100%
3. Adjust the supply damper (D1) until the pressure upstream of the TrueFlow (Ps) is 95 Pa
4. Adjust the intake damper (D3) until the pressure downstream of the damper (Poa) is 35 Pa
5. Measure and record the actual airflow, pressures (Ps & Poa), and fan watts
6. Without changing the damper settings, set the airflow to 75% and record Ps, Poa, and watts
7. Repeat step 6 at 50% and 25% settings
8. Repeat steps 2-7 for airflow settings of 1200, 1000, 800, and 600 cfm

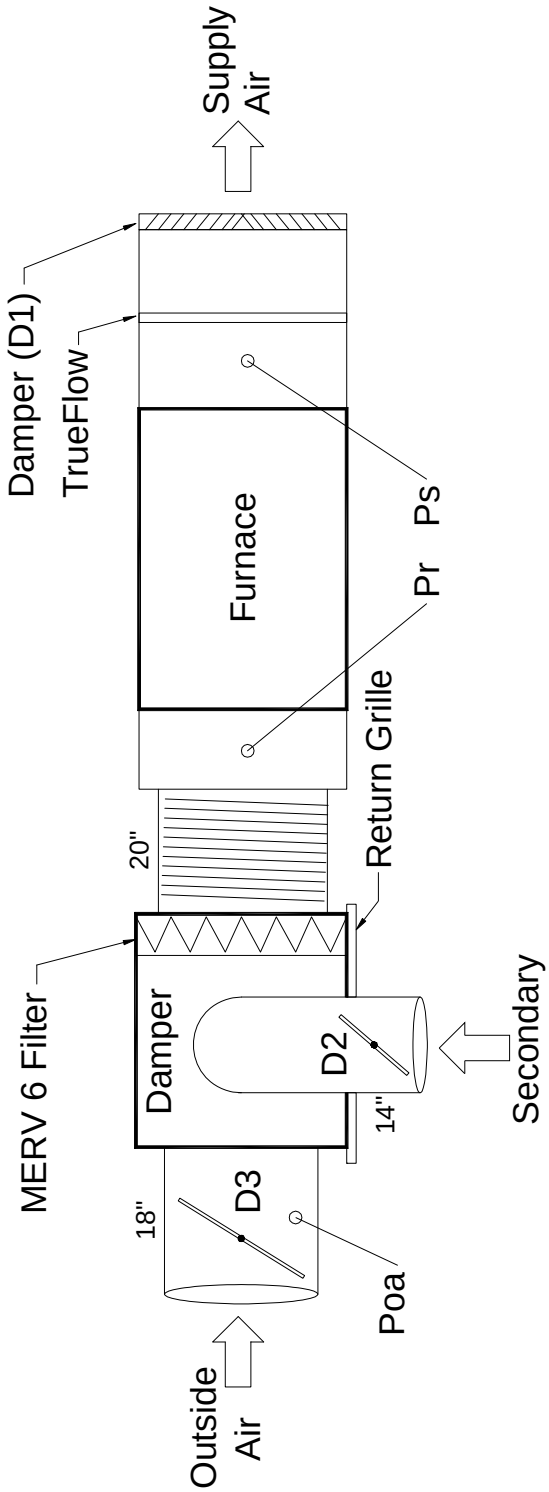

Figure 1: Test Configuration for Fan Watt Draw Tests

Test Conditions and Results Reporting Form

Unit	Manual Fan	Fan	Measured	Set Static Pres.	Meas. Static Pressure		
Tons	CFM Setting	%	CFM	Pres. (Pa)[1]	Supply	Return	Watts
4	1600	1.00		95			
	1200	0.78					
	800	0.52					
	400	0.26					
	240	0.16					
3	1200	0.78		95			
	900	0.58					
	600	0.39					
	300	0.19					
2.5	1000	0.65		95			
	750	0.49					
	500	0.32					
	250	0.16					
2	800	0.52		95			
	600	0.39					
	400	0.26					
	200	0.13					
1.5	600	0.39		95			
	450	0.29					
	300	0.19					
*Fan % assumes max airflow of			1540 cfm - dip switches set to D +10%				

TEST ASSUMPTIONS

Typical System Pressure Drops:

Return duct & grille	0.14”	35 Pa
Filter	0.20”	50 Pa
Supply duct & grilles	0.14”	35 Pa*
Cooling coil	0.24”	60 Pa*
Total fan p.d.	**0.72”**	180 Pa

Maximum rated pressure for GMVC80604BX furnace: **0.80”** ESP.

Minimal pressure drop in the 20” duct connecting furnace to damper so pressure at point Pr should be reflective of the pressure at the outlet of the damper.

*The supply side pressure of 95 Pa to be used in testing accounts for the combined pressure drop of supply ducting, grilles, and cooling coil.